WHITE-RODGERS

1F84-51

Programmable Electronic Digital
Heat Pump Thermostat
INSTALLATION AND OPERATION INSTRUCTIONS

Operator: Save these instructions for future use!

FAILURE TO READ AND FOLLOW ALL INSTRUCTIONS CAREFULLY BEFORE INSTALLING OR OPERATING THIS CONTROL COULD CAUSE PERSONAL INJURY AND/OR PROPERTY DAMAGE.

DESCRIPTION

Your new White-Rodgers 7-Day Digital Heat Pump Thermostat uses the technology of a solid-state microcomputer to provide precise time/temperature control. This thermostat offers you the flexibility to design heating and cooling programs that fit your needs.

Features:

- Separate program for each day of the week
- Simultaneous heat and cool program storage
- Preprogrammed temperature control
- Four separate time/temperature settings per 24 hour period
- LCD continuously displays set point, and alternately displays time and room temperature
- Temperature override until next program period
- Manual program override (HOLD temperature)
- °F/°C convertibility
- Temperature range 45° to 90°F
- Eight terminals for single or two-transformer systems
- O/B terminal for heat pump systems
- Armchair Programming Capability

PRECAUTIONS

This thermostat is intended for use with a 24 volt system; do not use this thermostat with a millivolt or line voltage system. If in doubt about whether your wiring is millivolt, line, or low voltage, have it inspected by a qualified heating and air conditioning contractor or electrician.

Do not exceed the specification ratings.

All wiring must conform to local and national electrical codes and ordinances.

This control is a precision instrument, and should be handled carefully. Rough handling or distorting components could cause the control to malfunction.

⚠ CAUTION

To prevent electrical shock and/or equipment damage disconnect electric power to system at main fuse or circuit breaker box until installation is complete.

⚠ WARNING

Do not use on circuits exceeding specified voltage. Higher voltage will damage control and could cause shock or fire hazard.

Do not short out terminals on gas valve or primary control to test. Short or incorrect wiring will damage thermostat and could cause personal injury and/or property damage.

SPECIFICATIONS

ELECTRICAL DATA

Electrical Rating:
20 to 30 VAC 50/60 Hz. or D.C.
0.05 to 1.5 Amps (Load per terminal)
1.5 Amps Maximum Total Load (All terminals combined)

THERMAL DATA

Setpoint Temperature Range:
45°F to 90°F (7°C to 32°C)

Operating Ambient Temperature Range:
32°F to 105°F

Operating Humidity Range:
0 to 90% RH (non-condensing)

Shipping Temperature Range:
-40°F to 150°F

APPLICATIONS

For use with:

- Heat pump systems with up to two stages heat, one stage cool

DO NOT USE WITH:

- Millivolt systems
- Systems exceeding 30 VAC and 1.5 amps
- 3-wire zoned hydronic heating systems

WHITE-RODGERS DIVISION
EMERSON ELECTRIC CO.
9797 REAVIS ROAD
ST. LOUIS, MISSOURI 63123-5398

Printed in U.S.A.

PART NO. 37-5739A
Replaces 37-5613C
9637

INSTALLATION

REMOVE OLD THERMOSTAT

1. Shut off electricity at the main fuse box until installation is complete. Ensure that electrical power is disconnected.
2. Remove the front cover of the old thermostat. **With wires still attached,** remove wall plate from the wall. If the old thermostat has a wall mounting plate, remove the thermostat and the wall mounting plate as an assembly.
3. **Identify each wire attached to the old thermostat using the labels enclosed with the new thermostat.**
4. Disconnect the wires from old thermostat one at a time. **DO NOT LET WIRES FALL BACK INTO THE WALL.**
5. Install new thermostat using the following procedures.

ATTACH THERMOSTAT BASE TO WALL

1. Remove the packing material from the thermostat.
2. If necessary, cut the non-electric heat jumper (see **NON-ELECTRIC HEAT SYSTEMS**) and/or the EMR jumper (see **ENERGY MANAGEMENT RECOVERY**). Check the setting of the O/B switch (see **O/B TERMINAL SWITCH SELECTION**).
3. If you want to program the thermostat before mounting the thermostat on the wall, see **ARMCHAIR PROGRAMMING.**
4. Gently pull the thermostat cover straight off the base. Forcing or prying on the thermostat will cause damage to the unit.
5. Check that the SYSTEM switch is in the **OFF** position. Connect wires beneath terminal screws on base using appropriate wiring schematic (see figs. 3 through 5).
6. Place base over hole in wall and mark mounting hole locations on wall using base as a template.
7. Move base out of the way. Drill mounting holes.
8. Fasten base loosely to wall, as shown in fig. 2, using two mounting screws. Place a level against bottom of base, adjust until level, and then tighten screws. (Leveling is for appearance only and will not affect thermostat operation.) If you are using existing mounting holes, or if holes drilled are too large and do not allow you to tighten base snugly, use plastic screw anchors to secure subbase.
9. Push excess wire into wall and plug hole with a fire-resistant material (such as fiberglass insulation) to prevent drafts from affecting thermostat operation.

NON-ELECTRIC HEAT SYSTEMS

Read the following information before clipping the non-electric heat jumper. If you are unsure of your application, contact a qualified serviceperson.

If your emergency or auxiliary system is non-electric (gas, oil, etc.) and will energize the blower, then jumper, W904, on the back of the thermostat base must be cut (see fig. 1).

If your emergency or auxiliary heat system is electric and requires that the thermostat energize the fan circuit, do not cut jumper W904.

ENERGY MANAGEMENT RECOVERY (EMR)

When the EMR feature is activated, the thermostat's microcomputer automatically calculates the time it will take to change the room temperature to the next program setting. Then the thermostat will start the heating or cooling system before the next programmed period so that the desired temperature is reached at or near the beginning of the next program period (the thermostat calculates 30 minutes for every 2°F temperature change).

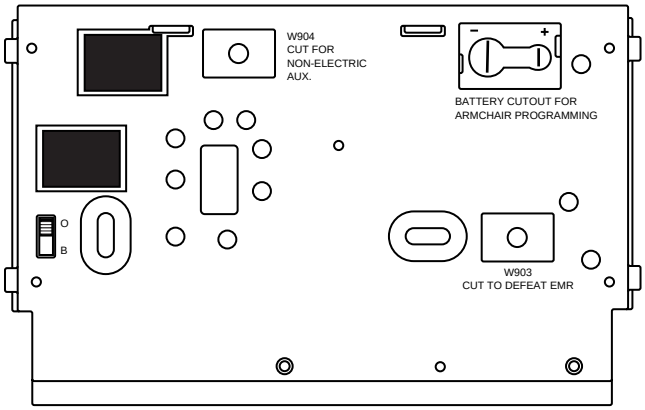

Figure 1. Back of thermostat base

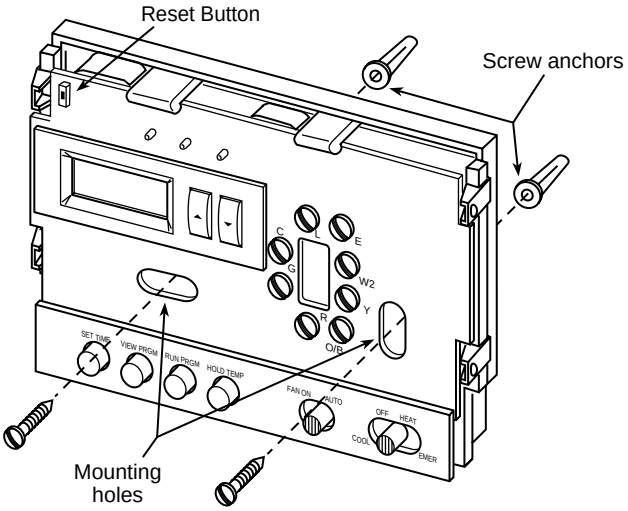

Figure 2. Thermostat base

For example, assume that the thermostat is programmed to provide an overnight heating temperature of 66°F, and during the next program period, beginning at 6:00 AM, the programmed temperature is 70°F. With EMR activated, the thermostat will automatically start the heating system at 5:00 AM, so that the programmed temperature of 70°F is reached by about 6:00 AM.

If the overnight room temperature drops only to 68°, the thermostat will start the system at 5:30 to reach the programmed temperature of 70° at 6:00.

The thermostat is shipped with the EMR feature **active**, which means that the thermostat will start the system before the beginning of the next program period. This feature provides better efficiency by allowing gradual temperature changes using only the first stage of heat and cooling.

To de-activate the EMR function, clip wire **W903** on the back of the thermostat (see fig. 1). The thermostat will then wait until the programmed time to start the system for a temperature change. This may cause the more costly electric second stage of heating to be used.

NOTE

The following wiring diagrams show **typical** terminal identification and wiring. For proper installation, refer to the original manufacturer's instructions.

NOTE

Relay contacts shown are thermostatically operated.

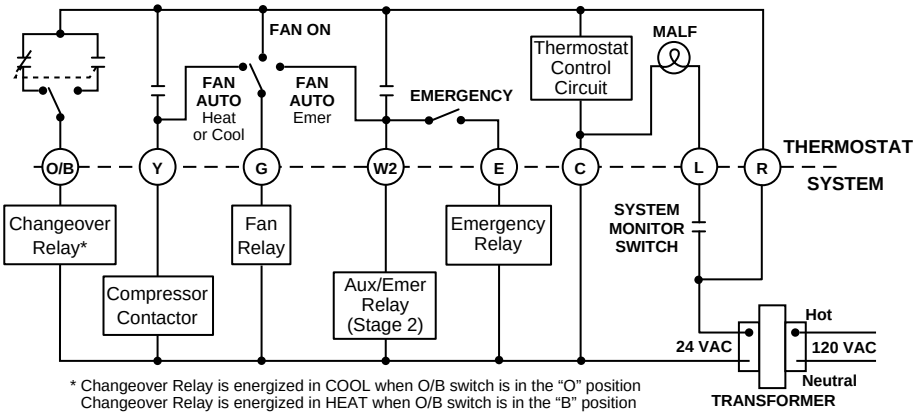

Figure 3. Typical wiring diagram for single transformer systems

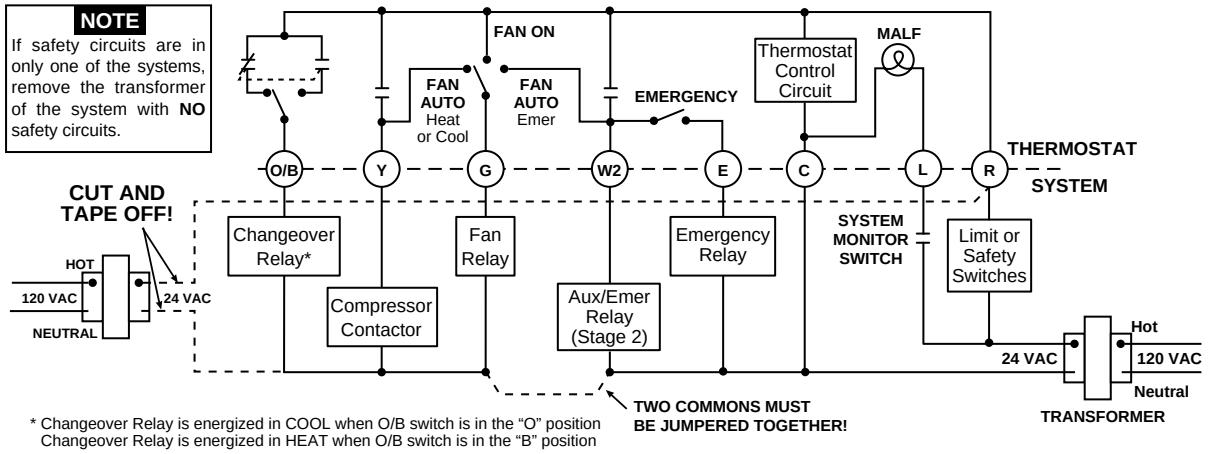

Figure 4. Typical wiring diagram for two transformer systems with NO safety circuits

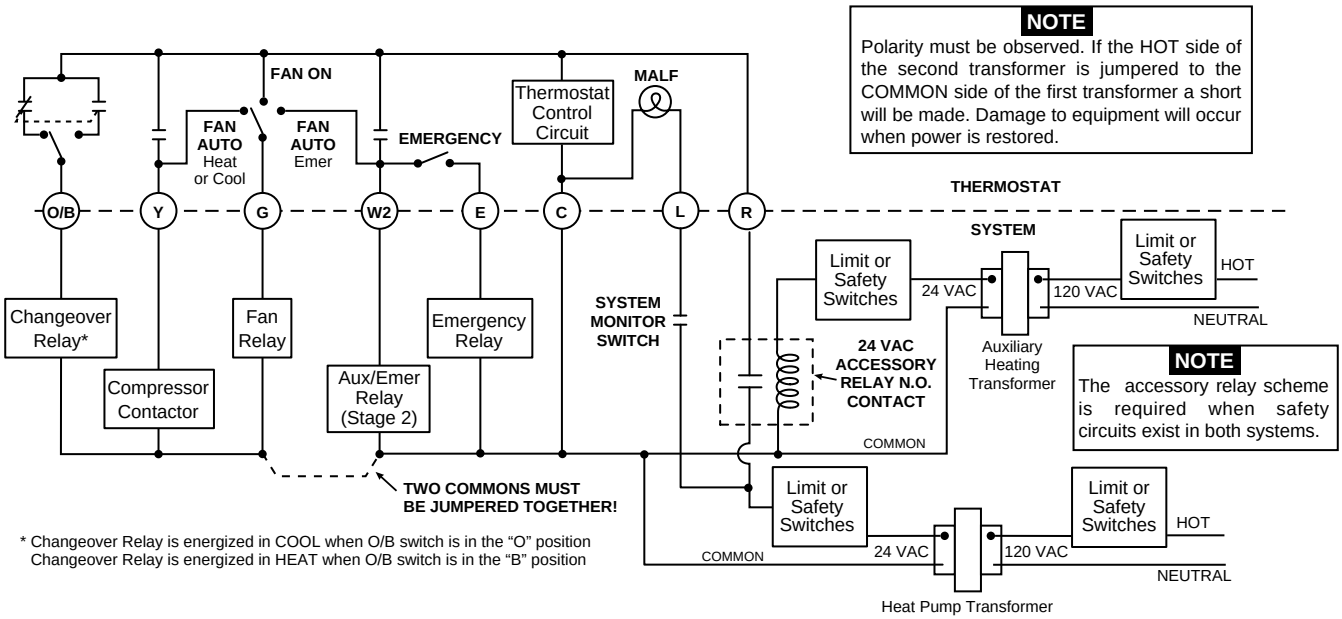

Figure 5. Typical wiring diagram for two transformer systems with safety circuits in BOTH systems

O/B TERMINAL SWITCH SELECTION

The O/B switch on this thermostat is factory set to the “O” position. This will accommodate the majority of heat pump applications, which require the changeover relay to be energized in COOL. If the thermostat you are replacing or the heat pump being installed with this thermostat require the “B” terminal, to energize the changeover relay in HEAT, the O/B switch must be moved to the “B” position.

ARMCHAIR PROGRAMMING

Armchair Programming is a unique feature that allows your thermostat to be programmed before being mounted on the wall. If you do not want to Armchair Program, the thermostat can be programmed after being mounted on the wall and system power turned on.

If you wish to Armchair Program your thermostat, temporarily hold a new 9-volt battery against the wires in the battery cutout on the back of the thermostat base for approximately 45 seconds. This will provide a charge that will last approximately 30 to 45 minutes to allow the thermostat to be programmed. After programming, the thermostat must be mounted on the wall, wires connected and system power turned on.

NOTE

To have sufficient time to complete the installation without losing the programming, hold the 9-volt battery to the terminals on the back of the base for 30 to 45 seconds again after programming the thermostat. The battery must be removed before mounting the thermostat on the wall.

ADJUSTABLE ANTICIPATION

The first stage has anticipation that can be set to 2.5 or 4 cycles per hour for heating or cooling. The second stage heat has a fixed anticipation. To change the first stage anticipation in the HEAT or COOL mode, press SET TIME and VIEW PRGM buttons at the same time until the desired setting is displayed (**S** for slow (factory setting) or **F** for fast).

CHECK THERMOSTAT OPERATION

If at any time during testing your system does not operate properly, contact a qualified serviceperson.

Fan Operation

1. Turn on power to the system.
2. Move SYSTEM switch to **OFF** position.
3. Move FAN switch to **ON**. The blower should begin to operate.
4. Move FAN switch to **AUTO** position. The blower should stop within a short period of time.

Heating System

1. Move SYSTEM switch to **HEAT** position. If the auxiliary heating system has a standing pilot, be sure to light it.
2. Press ▲ to adjust thermostat setting to 90° and hold for five seconds. Both stages of the heating system should begin to operate. However, if the word **HEAT** is flashing, the compressor lockout feature is operating (see **Lockout Bypass Option** to temporarily override the compressor lockout feature during testing).
3. Press ▼ to adjust temperature setting below room temperature. The auxiliary heating system will stop immediately, and the first stage will stop within three to four minutes.

Cooling System

⚠ CAUTION

To prevent compressor and/or property damage, if the outdoor temperature is below 50°F, DO NOT operate the cooling system.

1. Move SYSTEM switch to **COOL** position.
2. Press ▼ to adjust thermostat setting below room temperature. The blower should come on immediately on high speed, followed by cold air circulation. However, if the fan is running but the compressor is not running and the word **COOL** is flashing, the compressor lockout feature is operating (see **Lockout Bypass Option** to temporarily override the compressor lockout feature during testing).
3. Press ▲ to adjust temperature setting above room temperature. The cooling system should stop operating.

LOCKOUT BYPASS OPTION

FOR QUALIFIED SERVICE TECHNICIANS’ USE ONLY. OPERATORS SHOULD NOT USE THIS FEATURE DUE TO POSSIBILITY OF EQUIPMENT OR PROPERTY DAMAGE, OR PERSONAL INJURY.

COMPRESSOR SHORT TERM CYCLE PROTECTION

This thermostat has a built-in short term (5-minute) time delay. During this 5-minute period, the thermostat will lock out the compressor to allow head pressure to stabilize. If you want to override this feature while testing thermostat operation, simply press ▲ and ▼ at the same time.

DO NOT USE THE LOCKOUT BYPASS OPTION UNLESS THE COMPRESSOR OIL HEATERS HAVE BEEN OPERATIONAL FOR 6 HOURS AND THE SYSTEM HAS NOT BEEN OPERATIONAL FOR AT LEAST 5 MINUTES.

Before you begin programming your thermostat, you should be familiar with its features and with the display and the location and operation of the thermostat buttons. Your thermostat consists of two parts: the **thermostat cover** and the **base**. To remove the cover, gently pull it straight out from the base. To replace the cover, line up the cover with the base and press gently until the cover snaps onto the base.

THE THERMOSTAT BASE

Other than ▲ and ▼, the following buttons and switches are located behind the door on the bottom of the thermostat cover (see fig. 6). Pull the door down to open it.

The Thermostat Buttons and Switches

1. (Red arrow) Raises temperature setting.
2. (Blue arrow) Lowers temperature setting.
3. SET TIME/SET TEMP button.
4. VIEW PRGM (program) button.
5. RUN PRGM (program) button.
6. HOLD TEMP/ADV DAY button.
7. FAN switch (**ON**, **AUTO**).
8. SYSTEM switch (**COOL**, **OFF**, **HEAT, EMER**).

The Display

9. Indicates day of the week.
10. **HEAT** is displayed when the SYSTEM switch is in the **HEAT** position. **COOL** is displayed when the SYSTEM switch is in the **COOL** position. **COOL** or **HEAT** is displayed (flashing) when the compressor is in lockout mode.
11. Alternately displays current time and temperature.
12. **EMERGENCY** is displayed when the SYSTEM switch is in the **EMER** position.
13. Displays currently programmed set temperature (this is blank when SYSTEM switch is in the **OFF** position).
14. The word **HOLD** is displayed when the thermostat is in the HOLD mode.

OPERATING FEATURES

Now that you are familiar with the thermostat buttons and display, read the following information to learn about the many features of the thermostat.

- **SIMULTANEOUS HEATING/COOLING PROGRAM STORAGE** — When programming, you can enter both your heating and cooling programs at the same time. There is no need to reprogram the thermostat at the beginning of each season.
- **TEMPERATURE OVERRIDE** — Press ▲ or ▼ until the display shows the temperature you want. The thermostat will override current programming and keep the room temperature at the selected temperature until the next program period begins. Then the thermostat will automatically revert to the program.

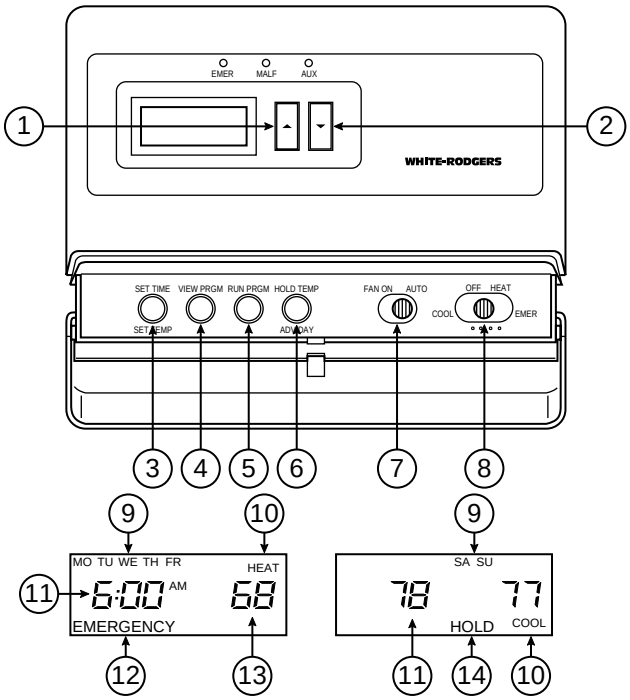

Figure 6. Thermostat display, buttons, and switches

- **HOLD TEMPERATURE** — The thermostat can hold any temperature within its range for an indefinite period, without reverting to the programmed temperature. Press HOLD TEMP/ADV DAY button. **HOLD** will be displayed. Then choose the desired hold temperature by pressing ▲ or ▼. The thermostat will hold the room temperature at the selected setting until you press RUN PRGM button to start program operation again.
- **°F/°C CONVERTIBILITY** — Press SET TIME/SET TEMP and HOLD TEMP/ADV DAY buttons until the temperature display is in Celsius (°**C**). To display Fahrenheit (°**F**), repeat the process.
- **TEMPERATURE DISPLAY ADJUSTMENT** — Your new thermostat has been accurately set in our factory. However, if you wish, you may adjust your new thermostat temperature display to match your old thermostat. This can be accomplished (within a ±4° range) as follows:
  1. Press VIEW PRGM and HOLD TEMP/ADV DAY buttons at the same time.
  2. Press ▲ or ▼ to adjust the displayed temperature to your desired setting.
  3. Press RUN PRGM to resume normal program operation.
- **COPY DAY FUNCTION** — This feature allows Monday's program to be copied into the rest of the week's programming. **This feature is only available the first time you program your thermostat.** To use this feature, simply enter the program for Monday as described in PROGRAMMING YOUR THERMOSTAT, and then press RUN PRGM.

- **RESET BUTTON -** (see fig. 2) resets the thermostat program to the factory setting. This button can be used if you do not like the program you have entered or if you wish to start over in the programming procedure. The reset button can also be used to reset the program if the thermostat has been subjected to a voltage spike and the program has become scrambled or frozen.

PROGRAMMING YOUR THERMOSTAT

Now you are ready to program your thermostat. This section will help you plan your thermostat's program to meet your needs. For maximum comfort and efficiency, keep the following guidelines in mind when planning your program.

- When heating (cooling) your building, program the temperatures to be cooler (warmer) when the building is vacant or during periods of low activity.
- During early morning hours, the need for cooling is usually minimal.

Look at the factory preprogrammed times and temperatures shown below. If this program will suit your needs, simply press the RUN PRGM button to begin running the factory preset program.

FACTORY PREPROGRAMMING

Heating Program for ALL days of the Week:			Cooling Program for ALL Days of the Week:		
PERIOD	**TIME**	**TEMP**	**PERIOD**	**TIME**	**TEMP**
1st	6:00 AM	70°F	1st	6:00 AM	78°F
2nd	8:00 AM	62°F	2nd	8:00 AM	85°F
3rd	5:00 PM	70°F	3rd	5:00 PM	78°F
4th	10:00 PM	62°F	4th	10:00 PM	82°F

If you want to change the preprogrammed times and temperatures, follow these steps.

1. Determine the heating and cooling temperatures you want to use. You may select up to four heating temperatures (**HEAT 1**, **HEAT 2**, **HEAT 3**, and **HEAT 4**), and up to four cooling temperatures (**COOL 1**, **COOL 2**, **COOL 3**, and **COOL 4**). Use the table below to write down the temperatures you have selected.

	Heat Temperatures				**Cool Temperatures**			
	1	2	3	4	1	2	3	4
Your selected temperatures*								
Factory pre-programmed temperatures*	70°F	62°F	70°F	62°F	78°F	85°F	78°F	82°F

* You may only program heating temperatures you have selected into the heating program and cooling temperatures into the cooling program (for example, you cannot program the COOL 1 temperature into your heating program). You may program the temperatures you choose in any order, and you may use the same temperature in consecutive program periods (for example, you may program period 1 with temperature 1 and periods 2, 3, and 4 with temperature 2). You do not have to use all possible temperature choices (for example, you may want to select temperatures for HEAT 1 and HEAT 2 only – in this case, the HEAT 3 and HEAT 4 temperatures would stay the same as previously programmed).

2. Determine the time periods during which you will program the temperatures you have just selected. You must program four periods for each day (periods 1, 2, 3, and 4). However, you may use the same heating and cooling temperatures for consecutive time periods. Also keep in mind that, for any given day, you can only program one set of times for both heating and cooling (for example, if you select 5:00 AM to begin heating period 1 on Monday, then your cooling period 1 for Monday will also begin at 5:00 AM). However, you may select different time periods for each day separately (for example, heating/cooling period 1 on Monday may begin at 5:00 AM, but heating/cooling period 1 on Saturday may begin at 9:00 AM). Use the table on the following page to plan your program time periods, and the temperatures you want during each period. You may also want to look at the sample program table to get an idea of how the thermostat can be programmed.

ENTERING YOUR PROGRAM

Set Current Time and Day

1. Press SET TIME/SET TEMP button once. The display will show the hour only.

EXAMPLE: 12: PM

2. Press and hold either ▲ or ▼ until you reach the correct hour and AM/PM designation (**AM** begins at midnight; **PM** begins at noon).
3. Press SET TIME/SET TEMP once. The display window will show the minutes only.

EXAMPLE: :00

4. Press and hold either ▲ or ▼ until you reach the correct minutes.
5. Press SET TIME/SET TEMP once. The display will show the day of the week.
6. Press ▲ or ▼ until you reach the current day of the week.
7. Press RUN PRGM once. The display will show the correct time and room temperature alternately.

Select Heating Temperatures

1. If you want to change the display from Fahrenheit to Celsius (or vice-versa), press SET TIME/SET TEMP and HOLD TEMP/ADV DAY at the same time.
2. Move the SYSTEM switch to **HEAT**.
3. Press SET TIME/SET TEMP four times. The display will show the number **1**, along with the currently programmed **HEAT 1** temperature.

EXAMPLE: HEAT 1 68

4. Press ▲ or ▼ to change the displayed temperature to your selected **HEAT 1** setting (if you only want to program a temperature for **HEAT 1**, skip to step 8).
5. Press SET TIME/SET TEMP once. The number **1** will change to the number **2**, representing **HEAT 2**.
6. Press ▲ or ▼ until you reach your selected **HEAT 2** temperature.
7. Repeat steps 5 and 6 to select **HEAT 3** and **HEAT 4** temperature settings, if desired.
8. Press RUN PRGM.

Heating/Cooling Schedule Plan

THIS THERMOSTAT ALLOWS ONE SET OF TIMES FOR BOTH HEATING AND COOLING

	Period 1			Period 2			Period 3			Period 4		
	Time	Heat Temp.	Cool Temp.	Time	Heat Temp.	Cool Temp.	Time	Heat Temp.	Cool Temp.	Time	Heat Temp.	Cool Temp.
Monday												
Tuesday												
Wednesday												
Thursday												
Friday												
Saturday												
Sunday												

SAMPLE
Heating/Cooling Schedule Plan

HEAT 1 = 65° COOL 1 = 80°
HEAT 2 = 68° COOL 2 = 78°
HEAT 3 = 70° COOL 3 = 76°
HEAT 4 = 72° COOL 4 = 74°

THIS THERMOSTAT ALLOWS ONE SET OF TIMES FOR BOTH HEATING AND COOLING

	Period 1			Period 2			Period 3			Period 4		
	Time	Heat Temp.	Cool Temp.	Time	Heat Temp.	Cool Temp.	Time	Heat Temp.	Cool Temp.	Time	Heat Temp.	Cool Temp.
Monday	5:00 AM	65° (1)	80° (1)	9:00 AM	65° (1)	80° (1)	3:30 PM	65° (1)	80° (1)	11:30 PM	65° (1)	80° (1)
Tuesday	6:00 AM	65° (1)	80° (1)	8:00 AM	70° (3)	76° (3)	4:30 PM	72° (4)	74° (4)	10:30 PM	65° (1)	80° (1)
Wednesday	5:00 AM	65° (1)	80° (1)	9:00 AM	70° (3)	76° (3)	3:30 PM	72° (4)	74° (4)	11:30 PM	65° (1)	80° (1)
Thursday	5:00 AM	65° (1)	80° (1)	9:00 AM	70° (3)	76° (3)	5:30 PM	72° (4)	74° (4)	11:30 PM	65° (1)	80° (1)
Friday	5:00 AM	65° (1)	80° (1)	9:00 AM	70° (3)	76° (3)	3:30 PM	72° (4)	74° (4)	10:30 PM	65° (1)	80° (1)
Saturday	8:00 AM	65° (1)	80° (1)	10:00 AM	70° (3)	76° (3)	3:30 PM	72° (4)	74° (4)	11:30 PM	65° (1)	80° (1)
Sunday	8:00 AM	70° (3)	78° (2)	9:00 AM	70° (3)	76° (3)	3:30 PM	68° (2)	76° (3)	9:30 PM	65° (1)	80° (1)

Enter Heating/Cooling Times and Heating Temperatures

1. Move the SYSTEM switch to **HEAT**.
2. Press VIEW PRGM once. **MO**, the abbreviation for Monday, will be displayed. Also displayed are the currently programmed start time for the 1st heating/cooling period and the currently programmed **HEAT 1**, **2**, **3**, or **4** temperature for the 1st heating/cooling period (flashing).

   EXAMPLE: 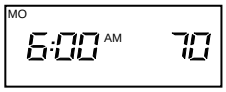

   This example display shows that for the 1st Monday heating/cooling period, the start time is 6:00 AM, and 70° is the programmed temperature (this example reflects factory preprogramming).
3. If the temperature displayed is not the **HEAT 1**, **2**, **3**, or **4** temperature you want for Monday's period 1, press ▲ or ▼ until the correct temperature is displayed (if you keep pressing ▲ or ▼, the **HEAT 1**, **2**, **3**, and **4** temperatures you previously programmed will be alternately displayed).
4. To change the displayed start time to the time you have selected for Monday's heating/cooling period 1, press SET TIME/SET TEMP once (the programmed time will flash). Press ▲ or ▼ until your selected time is displayed. The time will change in 30-minute increments. **The time that you program will be the start time of Monday's period 1 for both heating and cooling**. After selecting the correct period 1 start time, press SET TIME/SET TEMP again to return to the change temperature mode.
5. Press VIEW PRGM once. The currently programmed start time and heating setpoint temperature for Monday's heating/cooling period 2 will be displayed.

(Programming instructions continue on next page.)

6. Repeat steps 3 and 4 to select the start time and heating temperature for Monday's 2nd heating/cooling period.
7. Repeat steps 3 through 5 for Monday's 3rd and 4th heating/cooling period. Monday's heating program is now complete.

NOTE

If you are programming your thermostat for the first time, and you want programming for all days of the week to be the same as Monday's program, press RUN PRGM at this point, and proceed to the **SELECT COOLING TEMPERATURES** section (this COPY DAY feature only works the first time you program your thermostat; if you are changing your thermostat's programming, you must program each day separately).

8. Press HOLD TEMP/ADV DAY once. **TU** (indicating Tuesday's program) will be displayed, along with the start time for the 1st heating/cooling period and the currently programmed heating setpoint temperature.
9. Repeat steps 3 through 7 to complete Tuesday's heating program.
10. Continue entering each day's programming until all heating/cooling periods and heating temperatures have been selected.
11. Press RUN PRGM to end heating programming. Proceed to the **SELECT COOLING TEMPERATURES** section.

Select Cooling Temperatures

1. Move the SYSTEM switch to **COOL**.
2. Press SET TIME/SET TEMP four times. The display will show the number **1**, along with the currently programmed **COOL 1** temperature.
3. Press ▲ or ▼ to change the displayed temperature to your selected **COOL 1** setting (if you only want to program a temperature for **COOL 1**, skip to step 7).
4. Press SET TIME/SET TEMP once. The number **1** will change to the number **2**, representing **COOL 2**.
5. Press ▲ or ▼ until you reach your selected **COOL 2** temperature.
6. Repeat steps 4 and 5 to select **COOL 3** and **COOL 4** temperature settings, if desired.
7. Press RUN PRGM.

Enter Cooling Temperatures

⚠ CAUTION

If the outside temperature is below 50°F, disconnect power to the cooling system before programming. Energizing the air conditioner compressor during cold weather may cause personal injury or property damage.

1. Move SYSTEM switch to **COOL** position.
2. Press VIEW PRGM once. **MO**, the abbreviation for Monday, will be displayed. Also displayed are the start time you previously programmed for the 1st heating/cooling period and the currently programmed **COOL 1**, **2**, **3**, or **4** temperature for the 1st heating/cooling period (flashing). **Remember that the time you previously selected is for both heating and cooling periods. If you change a programmed start time now, it will also change the start time for the heating program.**
3. If the temperature displayed is not the **COOL 1**, **2**, **3**, or **4** temperature you want for Monday's period 1, press ▲ or ▼ until the correct temperature is displayed (if you keep pressing ▲ or ▼, the **COOL 1**, **2**, **3**, and **4** temperatures you previously programmed will be alternately displayed).
4. Press VIEW PRGM once. The currently programmed start time and cooling setpoint temperature for Monday's heating/cooling period 2 will be displayed.
5. Repeat step 3 to select the cooling temperature for Monday's 2nd heating/cooling period.
6. Repeat steps 3 and 4 for Monday's 3rd and 4th heating/cooling period. Monday's cooling program is now complete.

NOTE

If you are programming your thermostat for the first time, and you want programming for all days of the week to be the same as Monday's program, press RUN PRGM to begin program operation (this COPY DAY feature only works the first time you program your thermostat; if you are changing your thermostat's programming, you must program each day separately).

7. Press HOLD TEMP/ADV DAY once. **TU** (indicating Tuesday's program) will be displayed, along with the start time for the 1st heating/cooling period and the currently programmed cooling setpoint temperature.
8. Repeat steps 3 through 6 to complete Tuesday's cooling program.
10. Continue entering each day's programming until all cooling temperatures have been selected.
11. Press RUN PRGM to end programming and begin program operation.

CHECK YOUR PROGRAMMING

Follow these steps to check your thermostat programming one final time before beginning thermostat operation.

1. Move SYSTEM switch to **HEAT** position.
2. Press VIEW PRGM to view the 1st Monday heating period time and temperature. Each time you press VIEW PRGM, the next heating period time and temperature for Monday will be displayed in sequence. Press HOLD/ADV DAY to display Tuesday's 1st heating period program. Press VIEW PRGM to check the remaining Tuesday heating period times and temperatures. To check each day's heating program, press HOLD TEMP/ADV DAY to change days, then press VIEW PRGM to look at each programming period for the day (you may change any time or temperature during this procedure; remember that if you change the start time, it changes for both heating and cooling).
3. Press RUN PRGM.
4. Move SYSTEM switch to **COOL** position.
5. Repeat step 2 to check cooling temperatures.
6. Press RUN PRGM to begin program operation.

YOUR THERMOSTAT IS NOW COMPLETELY PROGRAMMED AND READY TO AUTOMATICALLY PROVIDE MAXIMUM COMFORT AND EFFICIENCY!