XEV EX48 Superheat Controller

XEV EX48 Driver for Emerson EX4,5,6,7,8 Electronic Stepper Expansion Valves (-40°F to 55°F SST)
Installation and Operations Manual

1.1. General Warning

Please read the following safety precautions and warnings before using this manual:

CAUTION!

- This manual is part of the product and should be kept near the controller for easy and quick reference.
- The controller should not be used for purposes different from those described in this manual. It cannot be used as a safety device.
- Check the application limits before proceeding.

SAFETY PRECAUTIONS AND WARNINGS!

- Check that the supply voltage is correct before connecting the controller.
- Do not expose to water or moisture: use the controller only within the operating limits and avoid sudden temperature changes with high humidity to prevent condensation from forming.
- Warning! Disconnect all electrical connections before performing any kind of maintenance.
- Mount the probe where it is not accessible by the end user. The controller must not be opened. In case of failure or faulty operation, send the controller back to Emerson Climate Technologies with a detailed description of the fault. Verify the maximum current that can be applied to each relay (see Section 15, Specifications).
- Ensure that the wires for probes, loads, and the power supply are separated and far enough from each other, without crossing or intertwining.
- In case of applications in industrial environments, the use of main filters (our mod. FT1) in parallel with inductive loads could be useful.

2.1. General Description

The XEV EX48 superheat controllers are factory pre-programmed to drive the Emerson EX4,5,6,7,8* electronic stepper expansion valves. The controller regulates evaporator superheat (SH) to optimize performance independent of climate or load conditions. The XEV EX48 controllers have also been pre-set to operate with the Emerson PT5, (4 to 20mA) pressure transducer and the ECN-N60, NTC temperature probe. The LAN connection transmits the pressure signal to the other XEVs; this allows the use of only one pressure transducer in multiplexed cabinet applications. The controller can also have two (2) configurable digital inputs, the first one is “dry contact” d1S and the other one is at “high voltage” d2S to simplify connections with cooling demand signal. With the integrated display, it is possible to see the superheat (SH) value, the Percentage valve opening, or the probe values; the local keyboard enables the controller to be programmed without any other devices. An RS485 serial link connects the controller to other Emerson monitoring and supervising systems, such as the Einstein “E2” with software version 2.84 and above or Xweb. * If EX7 or EX8 Valves are used, change the “tEP” Code in Pr2 parameter setting (see p.8)

2.2 Ordering Code for Individual Controllers

Emerson PCN	Description	Refrigerant
900001	XEV EX48	R404A,507,407A, 22,134a, R410A,CO2 Sub

Controllers Only
- XEV EX48 controller
- XEV electrical connectors

2.21 Ordering Codes for Complete Kits

Emerson PCN	Description	Refrigerant
900004	XEV EX4 KIT	R404A,507,407A,22, 134a, R410A,CO2 Sub
900005	XEV EX5 KIT	R404A,507,407A,22, 134a, R410A,CO2 Sub
900006	XEV EX6 KIT	R404A,507,407A,22, 134a, R410A,CO2 Sub
900007	XEV EX7 KIT	R404A,507,407A,22, 134a, R410A,CO2 Sub
900008	XEV EX8 KIT	R404A,507,407A,22, 134a, R410A,CO2 Sub

Complete Kits

- XEV EX48 controller
- XEV Electrical connectors
- EX Valve (4,5,6,7,8)
- EXV-M60 Valve Cable
- PT5-18M Pressure Transducer
- PT4-M60 Transducer cable
- ECN-N60 Temperature sensor
- 90-T40F3 24V Transformer, 40VA 60HZ 120/208/240V

2.22 Ordering Codes for Kits Less Valve

Emerson PCN	Description	Refrigerant
900003	XEV Kit Less Valve	R404A,507,407A,22, 134a, R410A, CO2 Sub

Kits Less Valve

- XEV EX48 controller
- XEV Electrical connectors
- EXV-M60 Valve Cable
- PT5-18M Pressure Transducer
- PT4-M60 Transducer cable
- ECN-N60 Temperature sensor
- 90-T40F3 24V Transformer, 40VA 60HZ 120/208/240V

The XEV-EX48 Superheat Controller comes pre-set to specifically work with all other Emerson components listed above. The base Controller model is the XEV22D. UL File Number E211299.

3.0 Wiring Connections

Note: If the high voltage Digital Input **d2S** (cooling demand) is not used, then the dry contact **d1S** must be used for Cooling Demand. When **d1S** is used some **PR2** parameters must be altered from factory default to;

i1P set to CL
i1F to CCL
i2P set op
i2F set to rl

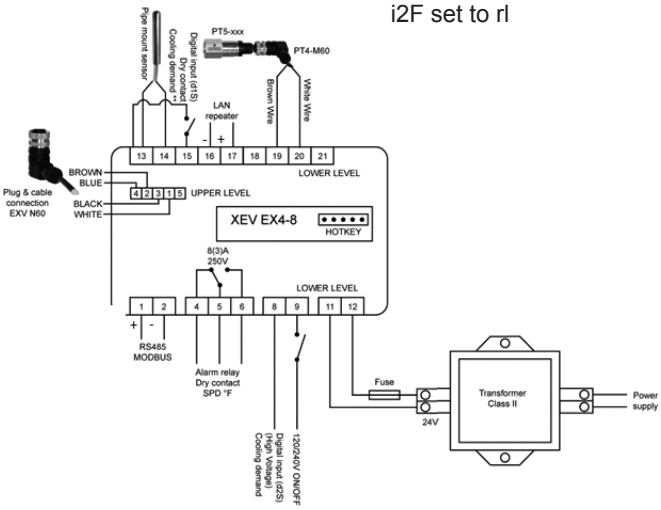

4.0 Valve Connections and Configuration

Note: For the XEV EX48 Controller, the valve motor parameter has been pre-adjusted to the Emerson EX valve's Bipolar motor.

tEP	Model	Lst (steps*10)	uSt (steps*10)	CPP (mA*10)	CHd (mA*10)	Maximum Current	Sr (step/ sec)
0	Manual	Setting	Par	Par	Par	Par	Par
1	EX4 EX5 EX6	5	75	50	10	0.9A	325
2	EX7	10	160	75	25	0.9A	325
3	EX8	10	260	80	50	0.9A	325

Table 4-1 *- tEP Parameter Table*

From table 4-1 select the valve through the **tEP** parameter. This way, you can be sure of the correct configuration Regarding connections, use *Table 4-2 as a quick reference on the connections for the Emerson EX valves.*

Connection Numbering	Emerson EX
4	Blue
2	Brown
3	Black
1	White

Table 4-2 *- 4-Wire Valves (Bipolar)*

5.0 Absolute Maximum Power

The XEV EX48 controller is capable of driving EX4,EX5,EX6,EX7,EX8 stepper valves; listed in ***Table 4-1 are*** the maximum values of current that the actuator can supply to the stepper wiring. **Use Minimum 20VA Class II transformers.**

NOTE: After making the connection, switch the XEV controller OFF and ON to make sure that the valve is positioned properly.

Download EX Valve Selection Software by going to link below. http://www.emersonclimate.com/Documents/ECV-Selection_R07.xls

6.0 Front Panel

Figure 6.1 - *XEV EX48 Front Panel*

6.1 Keys and Functions

Table 6-1 shows the keys found on the front Panel of the XEV EX48 and their corresponding functions:

Key	Function
SET	To display and to modify the **SUPERHEAT** set point. In programming mode, it selects a parameter or confirms a value.
∧	**By pressing and releasing this key, you will display the Temperature and Pressure values.** In programming mode, it scrolls through the parameters and/or increases their values.
∨	In programming mode, it scrolls through the parameters and/or decreases their values.
Key Combinations	
∧ + ∨	To lock and unlock the keyboard.
SET + ∨	To enter programming mode.

Table 6.1 - *XEV EX48 Front Panel Keys and Functions*

6.2 XEV EX48 LEDS

Each LED function is described in Table 6-2:

LED	Mode	Function
L	ON	Low pressure alarm
H	ON	Maximum operating pressure alarm
	OFF	Valve achieved set point or is completely closed
	BLINKING	Valve is moving
	ON	Valve is completely opened
	BLINKING	Serial communication present
	OFF	Serial communication absent
	ON	Superheat alarm

7.0 USER INTERFACE

7.1 Read-Only Values

1. Press and release the UP arrow key.
2. The first read-only label is displayed.
3. Slide labels using the UP or DOWN arrow keys.
4. Press the SET key to see the read-only value. To change and view the parameter, press SET.
5. To exit the fast access menu, press and release the SET + UP arrow keys or wait for the device timeout for 3 minutes.

7.2 Superheat Setpoint

1. Press the SET key until the setpoint is displayed.
2. To return and view the temperature, wait for 5 seconds or press the SET key again.

7.3 Modify Superheat Setpoint

1. Press the SET key until the set point is displayed.
2. Use the UP or DOWN arrow keys to change its value.
3. Press SET to store the new value.

7.4 Enter “Pr1” Parameters List

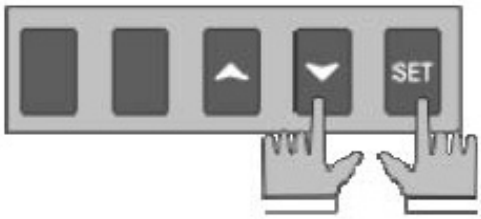

1. Press the SET + DOWN arrow keys for about 3 seconds.
2. The device will display the first parameter in **Pr1** menu.
   Only 3 parameters to set on **Pr1** are **Fty, oPE, SFd**
   Fty = Type of Refrigerant
   oPE = Start Opening Percentage
   SFd = Start Function Duration

7.5 Enter Pr2 Parameters List

1. Enter the Pr1 level menu.
2. Select Pr2 parameter and press SET.
3. The PAS label will be displayed followed by a blinking 0.
4. Insert 321 password using the UP and DOWN arrow keys.

7.6 Modify the Parameters Value

1. Enter the programming mode by pressing the SET and DOWN arrow keys for about 3 seconds.
2. Select the required parameter.
3. Press the SET key to display its value.
4. Use the UP or DOWN arrow keys to change its value.
5. Press the SET key to store the new value and move to the next parameter.
6. To exit, press SET + UP or wait 30 seconds without pressing a key.

Note: The set value is stored even when the time-out expires and ends the procedure.

7.7 How to Assign a MODBUS Address

1. To enter the programming mode, press and hold the SET and DOWN arrow keys together for about 3 seconds or until the dots at the top of the display start flashing.
2. Arrow down to PR2 and press SET to select.
3. PAS for password will display and flash.
4. Use the arrow keys to set the 321 password. Press SET to save.

Note: If a time-out occurs while setting the password (PR2 flashes), press SET to resume entering the password

5. Use the arrow keys to scroll through and locate Nod. Press SET. Use the arrow keys to scroll through and locate Std. Press SET.
6. Use the arrow keys to scroll through and locate Adr Press SET. Use the arrow keys to choose the address number of the device. Press SET to save.
7. To exit, press the SET and UP arrow keys together or wait 15 seconds without pressing a key.

8.0 Parameters

Note: All pressure parameters are relatives or absolutes depending on the PrM parameter.

Code	REGULATION		Min	Max	Default	Parameter Level
Fty	Type of Refrigerant	(R404A, 507, 22, 134, 407A, 410A, CO2) Type of Refrigerant. Fundamental parameter for correct functioning of all systems.			R404A	**Pr1**
oPE	Start opening percentage	(0 to 100%) Opening valve percentage when the start function is active and during post defrost phase. This phase duration is SFd time.	0	100	50	**Pr1**
SFd	Start function duration	(0.0 to 42.0 min: tens of seconds) It sets start function duration and post-defrost duration. During this phase, the alarms are neglected.	0 sec	42min	5 sec	**Pr1**
PEo	Probe error opening percentage	(0 to 100%) If a temporary probe error occurs, valve opening percentage is PEo until PEd time is elapsed. If PEo is different from 0, it ensures cooling also with probe error, because even if the device cannot calculate superheat, the valve can work at PEo	0	100	0	**Pr2**
PEd	Probe error delay before stopping regulation	(0 to 239 sec – 240 = On = unlimited) If the probe error duration is longer than PEd, valve closes completely. The Pf message is displayed. If PEd = On, valve opening is PEo until probe error finishes.	0	239	5	**Pr2**
tUE	Type of stepper motor	(uP- bP) Selects the kind of valve. uP = 5 to 6 wires unipolar valves bP = 4 wires bipolar valves *CAUTION! By changing this parameter, the valve has to be re-initialized*	_	_	bp	**Pr2**
tEP	Predefined valve selection	(1-10), (1=EX4,5,6) (2=EX7) (3=EX8) If tEP = 0, the user has to modify all the parameters of configuration in order to use the valve. If tEP is different from 0, the controller performs a fast configuration of the following parameters: LSt, Ust, Sr, CPP, and CHd. If tEP is different from 0, previous configuration of LSt, Ust, Sr, CPP, and CHd are overwritten.	1	10	1	**Pr2**
HFS	Kind of motor movement:	(HAF; FUL) • HAF = half step. Use this setting for the unipolar valve. • FUL = half step. Use this setting for the bipolar valve.	HAF	FUL	FUL	**Pr2**
LSt	Minimum number of steps	(0 to Ust) Selects the minimum number of steps. At this number of steps, the valve should be closed. Read the manufacturer datasheet to set this parameter correctly. The number of steps should be set within the advised range of functioning. *CAUTION! When this parameter is changed, the valve must be re-initialized. The controller performs this procedure automatically and restarts its normal functioning when the programming mode ends.*	0	Ust	See tEP	**Pr2**

8.0 Parameters

Code	REGULATION		Min	Max	Default	Parameter Level
Ust	Maximum number of steps	(LSt to 800*10) Selects the maximum number of steps. At this number of steps, the valve should be opened completely. Read the datasheet provided by the valve manufacturer to set this parameter correctly. The maximum number of steps should be set within the advised range of functioning. *CAUTION! When this parameter is changed, the valve must be re-initialized. The controller performs this procedure automatically and restarts its normal functioning when the programming mode ends.*	LSt	800*10	See tEP	**Pr2**
Est	Extra step in closing phase	(0 to 255 (*10)) Sets the number of extra steps the controller performs when the valve is closed at start up to force the closure of the valve.	0	255 (*10)	2	**Pr2**
Sr	Step rate	(10 to 600 step/sec) Maximum speed to change a step without losing precision (= losing steps). Set parameter under the maximum speed.	10	600	See tEP	**Pr2**
CPP	Current per phase (Only bipolar valves)	(0 to 100 * 10mA) Maximum current per phase used to drive valve.	0	100 *10ma	See tEP	**Pr2**
CHd	Holding current per phase (Only bipolar valves)	(0 to 100 * 10mA) The current per phase when the valve is stopped for more than 4 minutes.	0	100 *10ma	See tEP	**Pr2**
Sti	Stop regulation interval	(0.0 to 24.0 hours: tens of minutes) After regulating continuously for Sti time, the valve closes for Std time to prevent ice from forming.	0min	24hrs	0	**Pr2**
Std	Stop duration	(0 to 60 min) Defines the stop regulation time after Sti. During this stop, display shows StP message.	0	60	0	**Pr2**
MnF	Maximum opening percentage at normal functioning	(0 to 100%) During regulation, it sets the maximum valve opening	0	100	100	**Pr2**
FoP	Forced opening percentage	(0 to 100 - not used; nU) If FoP = not used; nU, valve works with regulation algorithm. If FoP is different from not used; nU, the valve stays at FoP opening percentage. This function could be useful during plant starting or during service operations.	0	100	nU	**Pr2**
Pb	Proportional band (0.1 to 50.0 C/ 1 to 90°F) PI proportional band. A value bigger than 5°C is advised.	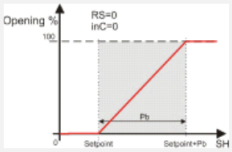			50°F	**Pr2**
rS	Band offset (-12.0 to 12.0°C / -21 to 21°F) PI band offset. It moves the proportional band of the PI. With rS = 0, the band is between [SEt to SEt + Pb].	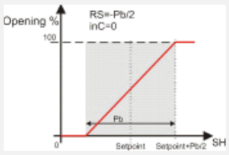			1°F	**Pr2**
InC	Integration time	(0 to 255 sec) PI integration time	0	255	200	**Pr2**

8.0 Parameters

PROBE PARAMETERS						
Code	**REGULATION**		**Min**	**Max**	**Default**	**Parameter Level**
tPP	Type of pressure transducer	(420 – 5V – LAn) Sets the type of pressure transducer to use: 420 = 4 to 20mA pressure transducer; 5V = 0 to 5V ratiometric transducer; LAn = the pressure signal comes from another XEV module.			420	**Pr2**
LPP	Enable pressure probe sending in LAN	(n to Y) If LPP = Y, the value of pressure read by device is sent in LAN. Only one device of the LAN can have LPP = Y.	n	Y	n	**Pr2**
PA4	Probe value At 4mA or At 0V	(-1.0 bar/ -14PSI) Pressure value measured by probe at 4mA or at 0V (related to PrM parameter).			0 psi	**Pr2**
P20	Probe value 20mA or At 5V	(PA4 to 50.0 bar/ 725 psi) Pressure value measured by probe at 20mA or at 5V (related to PrM parameter).			261 psi	**Pr2**
OPr	Pressure probe calibration	(-12.0 to 12.0 bar/ -174 to 174 psi)			0	**Pr2**
ttE	Type of temperature probe	(PtM to ntC) Sets the kind of probe used by the controller: PtM = Pt1000, ntC = NTC probe.	PtM	ntC	ntC	**Pr2**
otE	Temperature probe calibration	(-12.0 to 12.0°C/ -21 to 21°F)			0	**Pr2**
DIGITAL INPUTS						
i1P	Digital input 1 (free of voltage) digital input polarity	(CL, OP) CL = activated when closed; OP = activated when opened	CL	OP	CL	**Pr2**
i1F	Digital input 1 (free of voltage) digital input function	(CCL, rL) CCL = cooling call; rL = digital input activates relay	CCL	rL	rL	**Pr2**
d1d	Digital input 1 (free of voltage) activation delay	(0 to 255 min) This activation delay is used only if digital input is configured as	0	255	0	**Pr2**
i2P	Digital input 2 (high voltage) digital input polarity	(CL,OP) CL = activated when closed; OP = activated when opened	CL	OP	CL	**Pr2**
i2F	Digital input 2 (high voltage) digital input function	(CCL, rL) CCL = cooling call; rL = digital input activates relay	CCL	rL	CCL	**Pr2**
d2d	Digital input 2 (high voltage) activation delay	(0 to 255 min) This activation delay is used only if digital input is configured as	0	255	1	**Pr2**
ALARMS						
dAo	Alarm delay after restarting regulation	(0.0 to 42.0 min: tens of seconds) Time between digital input activation (configured as CCL) and alarm signaling. The LSH alarm is always signaled also during this time.	0	42	15	**Pr2**
tdA	Type of alarm signaled by relay (ALL, SH, PrE, di)	ALL = all alarm; SH = superheat alarm; PrE = pressure alarm; di = activation only when digital input configured as rL is activated.			SH	**Pr2**
LPL	Lower pressure limit for superheat regulation	(PA4 to P20 bar/ psi) When the suction pressure comes down to LPL, the regulation is performed with a LPL fixed value for pressure; when the pressure comes back to LPL, the normal pressure value is used. (related to PrM parameter).			-10	**Pr2**
MoP	Maximum operating pressure threshold	(PA4 to P20 bar/ psi) If the suction pressure exceeds the maximum operating pressure value, the controller signals a condition with a High Pressure alarm LED (related to PrM parameter).			100	**Pr2**

8.0 Parameters

ALARMS						
Code	**REGULATION**		**Min**	**Max**	**Default**	**Parameter Level**
LOP	Lowest operating pressure	(PA4 to P20 bar/ psi) If the suction pressure comes down to this value, a low pressure alarm is signaled with Low Pressure alarm LED (related to PrM parameter).			0	**Pr2**
PHy	Pressure alarm hysteresis	(0.1 to 5.0 bar/ 1 to 72 PSI) Alarm hysteresis to disable alarm signaling.			0	**Pr2**
dML	delta MOP-LOP	(0 to 100%) When a MOP alarm occurs, the valve will close at the dML percentage every one second until the MOP alarm is active. When LOP occurs, the valve will open at the dML percentage every one second until LOP alarm is active.	0	100	10	**Pr2**
MSH	Maximum superheat alarm	(LSH to 32.0°C/ LSH to 176°F) When the superheat exceeds this value, a high superheat alarm is signaled after interval SHd.			35	**Pr2**
LSH	Lowest superheat alarm	(0.0 to MSH°C/ 32 to MSH°F) When the superheat goes down to this value, a low superheat alarm is signaled after interval SHd.			2	**Pr2**
SHy	Superheat alarm hysteresis	(0.0 to 25.5°C/ 1 to 77°F) Hysteresis for superheat alarm deactivation.			1	**Pr2**
SHd	Superheat alarm activation delay	(0 to 255 sec) When a superheat alarm occurs, the time SHd has to pass before signaling alarm.	0	255	60	**Pr2**
FrC	Fast-recovery constant	(0 to 100 sec) Increases the integral time when SH is below the setpoint. If FrC = 0, fast-recovery function is disabled.	0	100	20	**Pr2**
DISPLAY						
Lod	Local display	Display: (SH, PEr, P1, P2) SH = superheat; PEr = valve opening percentage; P1 = value of temperature measured; P2 = pressure measured by P2 probe;			SH	
CF	Temperature measurement units (°C to °F)	°C = Celsius degree; °F = Fahrenheit degree *CAUTION! By changing the measurement unit, the regulation parameters have to be changed correctly.*	C	F	F	**Pr2**
PMU	Pressure measurement units	(bAr, PSI) bAr = bar; PSI = psi *CAUTION! By changing the measurement unit, the regulation parameters have to be changed correctly.*	bAr	PSI	PSI	**Pr2**
rES	Resolution (only °C)	(dE to in) Whether a whole number or decimal point is used in temperature reading	dE	in	in	**Pr2**
PrM	Pressure visualization mode	(rEL to AbS) rEL = relative pressure; AbS = absolute pressure All pressure parameters depend on this parameter.	rEL	Abs	rEL	**Pr2**
CLP	Cooling percentage	(Read only) Displays the percentage of time during which the cooling call was active in the time interval defined by parameter CLt.				**Pr2**
tP1	Temperature probe value	(Read only) Shows the temperature probe value from P1.				**Pr2**
PPr	Pressure probe value	(Read only) Shows the pressure probe value. The value depends on PrM.				**Pr2**
tP2	Temperature from P2	Shows the temperature obtained from conversion of pressure value.				**Pr2**

8.0 Parameters

DISPLAY						
Code	**REGULATION**		**Min**	**Max**	**Default**	**Parameter Level**
oPP	Opening percentage	Shows the actual opening percentage of the valve.				**Pr2**
d1S	Free of voltage digital input state	(Read only) Shows the free of voltage digital input.				**Pr2**
d2S	High voltage digital input state	(Read only) Shows the high voltage digital input state.				**Pr2**
Adr	RS485 serial address	(1 to 247) Identifies the controller address when connected to a MODBUS compatible monitoring system.				**Pr2**
Mod	MODBUS	(AdU to StD) AdU = (Only for XWEB systems) In this case, the XEV and the thermostatic controller are considered standalone controller (it requires a custom library for XWEB); StD = to use XEV in standalone mode, in this case normal MODBUS-RTU protocol is used.			StD	**Pr2**
Ptb	Parameters map	(Read only) It identifies the parameters map written by factory.				**Pr2**
rEL	Release firmware	(Read only) It shows the firmware release.				**Pr2**
Pf	Pressure and / or Temperature Fault	If pressure or temperature exceed the ranges of the transducer or temperature sensors				--
Pr2	Second level menu					**Pr2**

9.0 Digital Inputs

The XEV EX48 comes with two (2) digital inputs: a voltage-free input and a high voltage input; Both can be configured as cooling call. In this way the cooling signal can come from the controllers with direct load outputs or via the Controllers with voltage-free outputs. One of these inputs must be configured as the cooling call.

10.0 Forced Opening

If necessary, change the **FoP** parameter to force the valve to open. For example, if **FoP** is set to **50 (FoP = 50)**, the valve will be opened at half of full scale. *To disable this function, set the **FoP** to default value **(FoP = not used).***
The valve opening is enabled only when **CCL** digital input is enabled**.**

11.0 Electrical Connections

The controller comes with a screw terminal Block to connect cables with a cross section up to 2.5 mm^2. Heat-resistant cables have to be used. Before connecting the cables, verify that the power supply complies with the controller's requirements. Separate the probe cables from the power supply cables, from the outputs and the power connections. *Do not exceed the maximum current allowed on each relay, in case of heavier loads, use a suitable external relay.*

11.1 Probes

The recommended temperature probe placement is illustrated in Figure 11-1. For Suction Lines less tan 7/8" Diameter, bulb placement should be at 12 o'clock position. For Suction lines greater tan 7/8" Dia. The preferred bulb placement is at 4 or 8 o'clock For suction pressure probes, there is no particular recommendation.

Temperature Sensor Must Be insulated

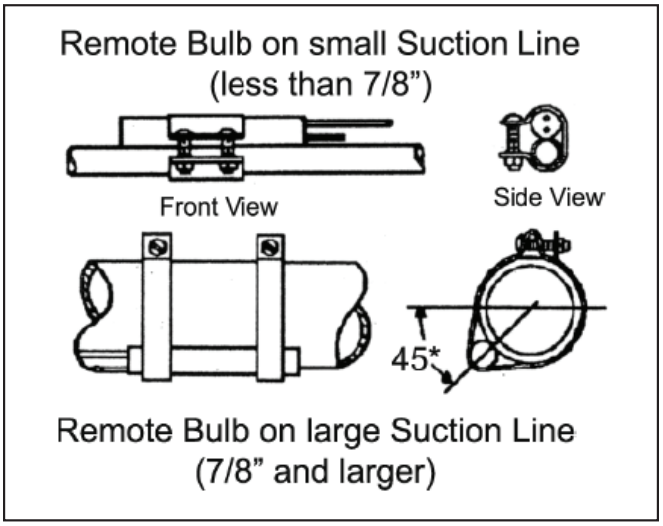

Figure 11-1 - Recommended Temperature Probe Placement

12.0 RS485 Serial Line

All models can be connected to the monitoring and supervising system XWEB500.
If **Mod = StD**, the standard MODBUS-RTU protocol is used; if **Mod = AdU**, *the custom XWEB library is required*. This last configuration makes it possible to use the same serial address of the thermostat that gives the cooling request to XEV. In this way, it is possible to reduce the number of addresses used.

13.0 How to Use the Hot Key

13.1 How to Program a Hot Key From the Controller (Upload)

1. Program one controller using the front keypad.
2. When the controller is ON, insert the Hot Key and press the UP arrow key; the **uPL** message will appear followed by a flashing End LED.
3. Push the SET key and the End LED will stop flashing.
4. Turn OFF the controller, remove the Hot Key, then turn it ON again.

Note: The Err message is displayed in case an error or failure in programming occurs. In this case, push the UP arrow key again if you want to restart the upload or remove the Hot Key to abort the operation.

13.2 How to Program the Controller Using a Hot Key (Download)

1. Turn OFF the controller.
2. Insert a programmed Hot Key into the 5-pin connector and then turn the controller ON.
3. Automatically the parameter list of the Hot Key is downloaded into the controller memory, the doL message will blink followed by a flashing End LED.
4. After 10 seconds, the controller will restart work with the new parameters.
5. Remove the Hot Key.

Note: The Err message is displayed in case an error or failure in programming occurs. In this case, turn the unit OFF and then ON if you want to restart the download or remove the Hot Key to abort the operation.

14.0 Display Messages

Message	Cause	Outputs
nA	None of the digital inputs configured as **CCL** are activated	Valve closed
Pf	The **PEd** time is elapsed and the regulation is stopped.	Valve closed after PEd. There is a probe error.
P1	Temperature probe fault	According to PEo and Ped
P2	Pressure transducer fault	According to PEo and Ped
HSH	High superheat alarm	Bi PI
LSH	Low superheat alarm	Valve closed
LPL	Low Pressure Limit	See LPL parameter
MoP	Maximum Operating Pressure	See dML parameter
Lop	Lowest Operating Pressure	See dML parameter
StF	Start Function enabled	See SFd parameter
StP	Regulation stop caused by **Std** and **Sti**	Valve closed
EE	Memory anomaly	
PF	Lockout cause by **P20** being exeeded by **PEd**	Valve closed

14.1 Alarm Recovery

Probe alarms P1 and P2 start a few seconds after the fault in the probe; they automatically stop few secondsafter the probe restarts normal operation. Check the connections before replacing the probe. Maximum and minimum alarms HSH, LSH, MoP, and LoP automatically stop as soon as the variable returns to normal values.

The controller is provided with an internal check to verify memory integrity. Alarm EE flashes when a failure in the internal memory is detected. In this case, call for service.

15.0 Specifications

Housing	**Self extinguishing ABS**
Dimensions	Case Front: 4 DIN modules, 70 mm x 135 mm with male and female connectors Depth: 60 mm
	Mounting: DIN RAIL mounted in a omega (3) din rail
Protection	IP20
Connections	Detachable screw terminal block ≤ 2.5 mm2 wiring
Power Supply	24VAC/DC ±10%
Power Absorption (depending on the valve)	20VA max
Display	Three (3) digits with icons, red LEDs, height 14.2 mm
Inputs	1 temperature probe Pt1000 or NTC (For EX Valves)
	1 pressure transducer 4 to 20mA (For EX Valves) or 0 to 5V
Digital Inputs	1 free of voltage
	1 at high voltage
Outputs for Valve	Bipolar or unipolar valves
Data Storage	On the non-volatile memory (EEPROM)
Kind of Action	1B
Pollution Grade	Normal
Software Class	A
Temperature	Operating: 0 to 60°C
Relative Humidity	20 to 85% (no condensing)
Resolution	0.1°C or 1°F
Precision at 25C	±0.7°C ±1 digit

16.0 E2 MODBUS Network Wiring

- Connect MODBUS Network to the RS485 Connector on the E2 PIB board (Belden 8641 recommended).
- Note to wire the RS485 +/- polarity at the E2 in the *reverse* of the XEV devices.
- Position the three termination jumpers to the UP (terminated) position to provide RS485 termination at the E2.
- Do not connect the shield of the MODBUS network to the E2 PIB center terminal. Instead, use a 100 ohm 1/2 watt resistor to connect the MODBUS cable shield to earth ground.
- At each XEV device, wire the MODBUS cable to the RS485 +/- terminals and connect the MODBUS shield to the pin **16** terminal.
- Terminate the end of the MODBUS network at the last XEV device on the daisy chain with the MODBUS termination block (P/N 535-2711), or by connecting a 150 ohm resistor between the MODBUS +/- terminals.

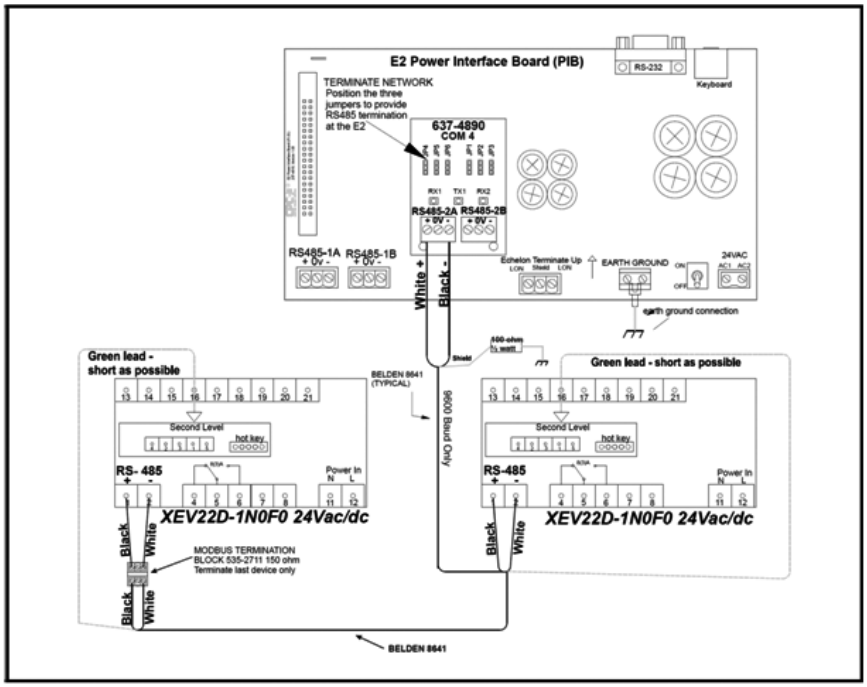

17.0 ECT MODBUS Networking to E2s

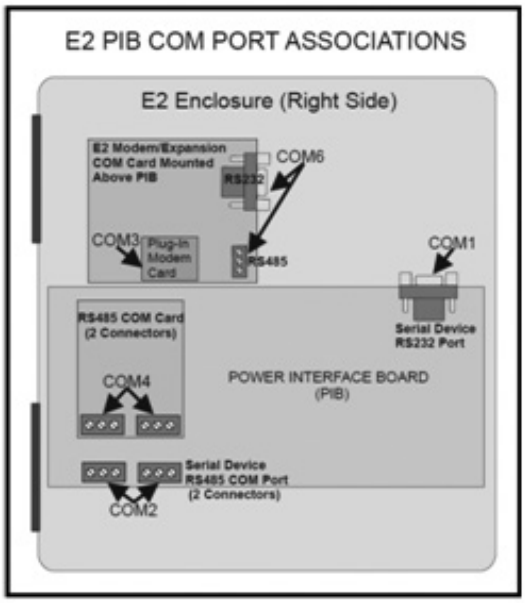

Figure 17.1 - *Location of E2 COm Parts (E2 Versions 3.xx and below)*

Connecting an XEV controller to an E2 requires the E2 to be version 2.84 or above. Contact Retail Solutions for upgrade information if the controller is a version before 2.84.

An E2 has up to three COM ports that can be assigned for MODBUS communication: COM2, an RS485 port on the E2 power interface board, and COM4 and COM6, which are optional ports requiring expansion cards. COM4 is recommended for MODBUS connection of Emerson units.

COM ports can only be used for one function; in other words, if COM2 is set up as the I/O network, you cannot connect MODBUS devices to COM2. Ensure your E2 is equipped with an RS485 COM Card (P/N 637-4890) and configured in E2 General Services (Menu 7 3 1 Serial tab) to enable COM4 or an E2 Expansion COM Card (P/N 637-4871) to enable COM6.

Connect the MODBUS network cable to the three terminal connector on the COM port you wish to assign as MODBUS. Reverse polarity of +/- on RS485 cable from E2 to the device.

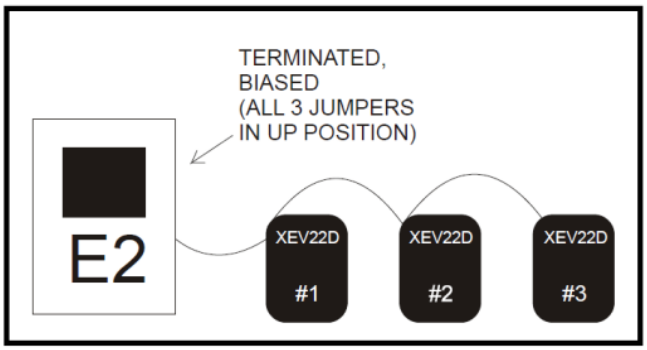

Figure 17.2 - *MODBUS Networking*

17.1 E2 Setup of Devices

17.1.1 Set Up Network Ports

Before setting up device, the port on the E2 that has the MODBUS cable connected must be set up as a MODBUS port.

1. Log in to the E2 with Level 4 access.
2. Press Menu followed by 7 3 1 **General Controller Info**
3. Press Ctrl + 3 to open the **Serial** tab of the General Controller Info setup screens:

Figure 17.3 - *Serial Communications Manager Screen*

4. This screen will have a "Connection" field for all COM ports on the E2. Highlight the COM port connection field that will be used for the device, and press F4 **LOOK UP**. From the list of network types, select **MODBUS.**

5. Four fields will become visible underneath the COM port connection field, which pertain to the way the device communicates:
   - **Baud** - Default setting is 19.2k. The baud rate setting should be set to match the baud rate of the device(**9600**). (All devices connected to the same COM port should be set to the same baud rate.)
   - **Data Size** - Leave this field at the default value (**8**)
   - **Parity** - Leave this field at the default value(**None**)
   - **Stop Bits** - Leave this field at the default value (**1**).
6. Press to save changes and exit.

17.1.2 Add and Connect the Device

To enable communications between E2 and the units, the devices must be added and addressed in E2.

1. Log in to the E2 with Level 4 access.
2. Press Menu 7 3 1 - **Connected I/O Boards and Controllers.**

Figure 17.4 - *Num Network Ctrls NetSetup Screen*

3. In the Num Network Ctrls: NetSetup screen, under the **ECT tab**, enter the number of devices in the **Quantity field**. (**Max** shows the maximum number of devices allowed on the network.)
4. Press to return to the *Network Setup* menu, then select 1 - **Network Summary.**
5. Locate the units you added to the network list (press Page Up and Page Down to scroll through the list). If desired, enter new name for each device in the **Name** field.

Figure 17.5 - *Network Summary Screen*

6. By default, each device in the network list has a board number of 0. To set the address and begin communication, choose the device and press F4 . In the list of MODBUS devices, choose the address number corresponding to the address set up through the front display, and press Enter to select it. A window will open where you can specify the address of the controller. If a network ID has already been selected, its name will be shown next to the network ID in this list. If the network ID you are trying to assign has already been used, you must set the address on this device to a different number that is not being used.

Figure 17.6 - *List of MODBUS Devices*

7. Repeat Steps 5 and 6 until each device has a name and address.
8. When finished, press to return to the Network set up menu, then press Network Summary (Figure 17-7). Locate the devices you set up, and look at each device's status in the Status field You will see one of the following messages:

- ***Online*** - The device is communicating normally.
- ***Offline*** - The device is not communicating, has not been commissioned, is not functional, or is not powered up. Verify the device is powered up, wired correctly, and has the proper network address, baud rate, and parity.
- ***Unknown*** - The device is not communicating or has not been commissioned. Verify the device is powered up, wired correctly, and has the proper network address, baud rate, and parity.
- ***No Port -*** No port is set up in the E2 Serial Configuration Manager to be a MODBUS port.
- ***Wrong FW Rev -*** This message is likely caused by the device having a firmware version older than the minimum revision required by E2 for communication. Replace the device with a new one or a device that has the latest version of firmware on it.

Figure 17.7 - *Network Summary Screen*

17.2 Wiring Types

Retail Solutions specifies Belden #8761 shielded twisted pair cables for use as MODBUS wiring (or Belden #82761 and Belden #88761 for plenum installations).

For MODBUS network wiring of XEV series of controllers to E2, Belden #8641 (CPC P/N 135-8641) is the recommended wire type to use.

If the recommended cable is not available in your area, be sure the wiring meets or exceeds the following

Shielded?	Yes
Conductor Type	Twisted Pair
Guage	18-24 AWG
Capacitance between signal wires	31pF/ft or leass
	(9.45m) or less
Capacitance between signal and shield	59 pF/ft or less
	(17.98m) or leass
Maximum Length	4000ft 18 to 22 AWG
	(1219.2m)
	(762m)
Nominal Impedance	120 50

17.3 MODBUS Termination Box

Because the XEV device has no on-board means of termination, use the MODBUS termination block (*P/N 535-2711) for termination that can be* wired to the end of the cable segment using the three pin connector. Wire the two signal wires to the outside terminals, and connect the shield to pin **16, keeping** the exposed shield wire length as short as possible (3 inches ideal maximum length).

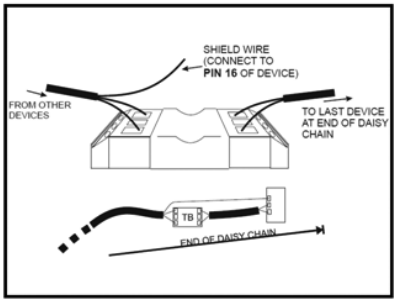

Figure 17.8 - *MODBUS Termination Block (P/N 535-2711)*